RADIATOR & FAN COMBO- V8 MUSTANG '67-'69

Part #50167

Mounting Instructions: The fan assembly is already mounted to the radiator for your convenience. Remove the old fan and radiator from the vehicle. Take note of the radiator's mounting points to the vehicle. ***The Flex-a-lite radiator is a direct bolt-in replacement,*** matching OEM mounting locations. If necessary mount using optional mounting slots provided on side brackets.

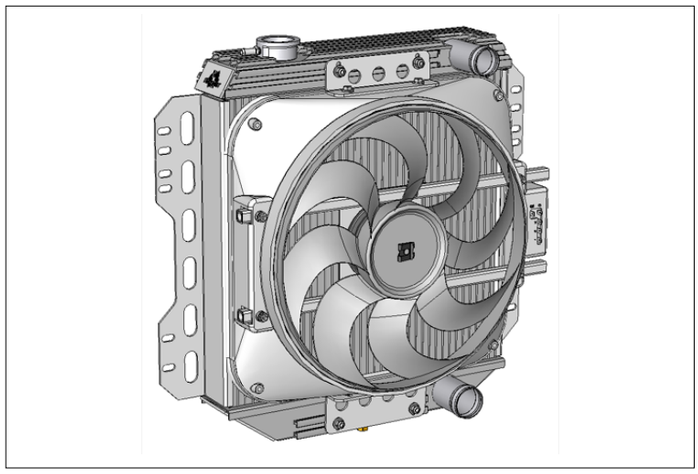

Wiring Instructions:

1. Disconnect the battery Negative (-) terminal
2. Connect the "**B**" terminal on the control to the 12 volt positive (+) battery terminal using the thick red wire and fuse holder provided in the kit.
3. Connect the "**G**" terminal on the control to battery negative (ground -) terminal using the thick black wire provided in the kit. (Do not install fuse at this time)
4. Connect the "**+**" terminal of the control box to a keyed 12 volt positive (+) power source (i.e. fuse box), using the thin red wire and fuse taps (if necessary) provided in the kit. ***NOTE*: Attach this wire to an ignition controlled source to stop the fan when the vehicle is shut off. Attach this wire to a constant source to keep the fan running after the vehicle is shut off.**
5. **If you have air conditioning:** With the 3-way connector provided, pass the A/C clutch positive(+) wire (connected to the A/C compressor) through the connector. Place the green wire provided into the closed end of the connector. Crimp metal plate. Snap plastic cover into place. Attach green wire to the "**C**" terminal of the control box.
   Air Conditioning Relay activates fan when A/C is turned on
6. Insert temp. probe through radiator core near the upper (inlet) hose. Install rubber cap over end of probe.

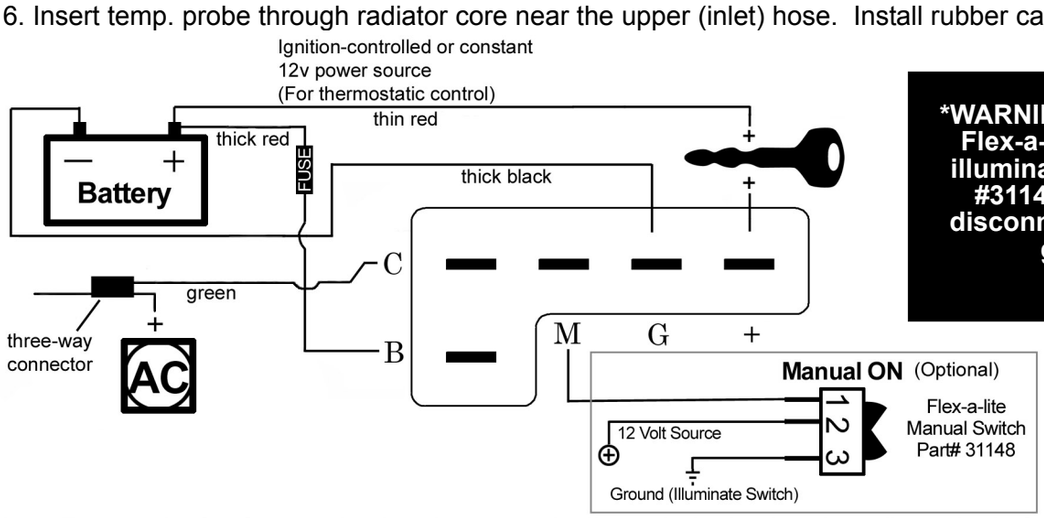

***WARNING: If not using Flex-a-lite's optional illuminated switch (PN #31148), you must disconnect the switch ground.**

Note: To stop the fan from activating thermostatically, omit the lead to the "+" terminal of the control box. "B", "G", & "M" must remain connected.

ADJUSTING THE TEMPERATURE CONTROL

1. Attach the temperature control knob to the control box.
2. Turn the knob clockwise completely.
3. Idle the vehicle, observe the temperature of the vehicle. (Use the vehicles gauge)
4. When the temperature of the vehicle reaches slightly above normal, turn the control knob counter-clockwise until the fan turns on. From here on, the fan should activate at this temperature setting. Adjust as necessary according to your vehicle needs.

OPTIONAL CONNECTIONS

Manual Switch (not included) - Allows manual operation of the fan.

(***This step is based on Flex-a-lite's manual switch part #31148, other switches will cause this unit to fail***).

1. Connect the "M" terminal to terminal 1 on the switch.
2. Attach terminal 2 of the switch to a 12V positive (+) source.
3. Attach terminal 3 of the switch to ground, in order to illuminate the switch.

The Flex-a-lite Limited Warranty
Flex-a-lite Consolidated, 7213-45th St. Ct. E. Fife, WA 98424, Telephone No. 253-922-2700, warrants to the original purchasing user, that all Flex-a-lite products to be free of defects in material and workmanship for a period of 365 days **(1 year)** from date of purchase. Flex-a-lite products failing within 365 days **(1 year)** from date of purchase may be returned to the factory through the point of purchase, transportation charges prepaid. If, on inspection, cause of failure is determined to be defective material or workmanship and not by misuse, accidental or improper installation, Flex-a-lite will replace the fan free of charge, transportation prepaid. **Flex-a-lite will not be liable for incidental, progressive or consequential damages.** Some states do not allow the exclusion or limitation of incidental or consequential damages, so the above limitation or exclusion may not apply to you. This warranty gives you specific legal rights and you may have other rights, which vary from state to state. The Flex-a-lite warranty is in compliance with the Magnuson-Moss Warranty Act of 1975.

rev. 07-16-09 #54167