Flex-a-lite®

Flex-a-Fit®
ALUMINUM RADIATORS

Camaro Radiator & Fan Kit #52187 or Camaro Radiator Kit #52007

Fits 1967-1969 “First Generation” Chevrolet Camaro

Notes: Measure for clearances prior to installation. May not be suitable within certain Big Block / long water pump engine configurations.
Manual transmission preferred; automatic transmission requires a remote cooler.

INSTALLATION INSTRUCTIONS

Remove Existing Fan, Shroud & Radiator

1. BE SURE THE ENGINE IS COOL BEFORE PROCEEDING!!

2. Disconnect the negative (-) battery cable before proceeding with the installation.

3. Utilizing the drain plug on the drivers side of the radiator, start draining the coolant. ***see Detail 1*** It may be necessary to remove the radiator cap to release the vacuum inside the radiator for better draining.

4. Loosen, but do not remove, the four (4) bolts holding the fan to the water pump.

5. Remove the screw securing top of fan shroud to bracket centered above the radiator. ***see Detail 2***

6. Remove the upper and lower hoses from the radiator. It is not necessary to remove them completely from the vehicle for installation.

7. Remove fan belt by loosening top and bottom bolts of the alternator bracket, then pivot alternator toward the water pump to relieve belt tension.

8. Remove the four (4) bolts holding the fan to the water pump pulley. Note: Save these bolts to be used later. Lift the original shroud and fan out of the vehicle at the same time.

9. Remove shroud mounting bracket centered above radiator. ***see Detail 2***

10. If vehicle is equipped with an automatic transmission, remove both inlet and outlet lines from passenger side of radiator. ***see Detail 3***

11. Remove bolts securing radiator to vehicle on both driver and passenger side. Note: you may need to remove battery and battery tray to gain access to mounting bolts on passenger side. Save mounting bolts removed from passenger side. You will be reusing these bolts later.

12. Remove the original radiator by lifting it straight up. Note: Use caution while removing the radiator, it may still contain coolant which can spill out.

Detail 1

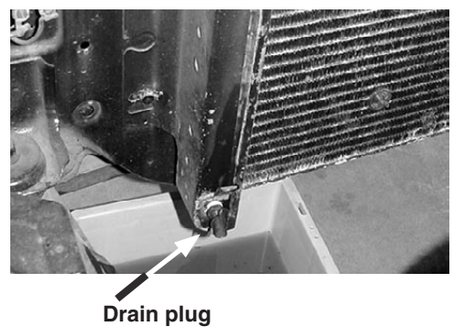

Detail 2

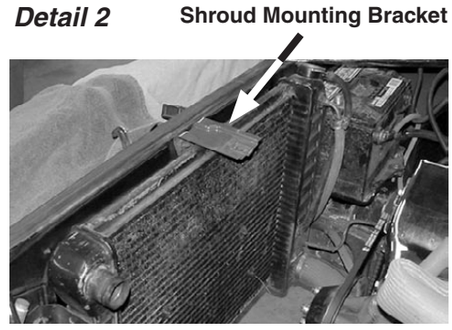

Detail 3

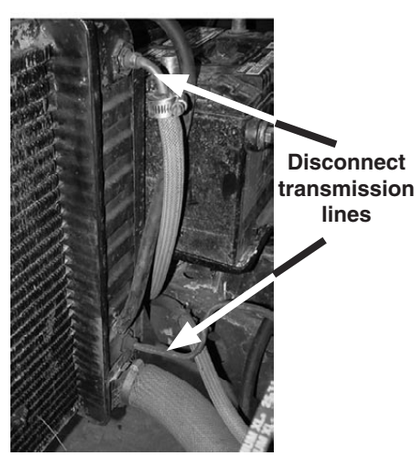

Installation instructions continued on next page

Installation of Radiator and Fan Combo #52187 or Radiator only #52007

1. Utilizing the included T-nuts (4 ea.), washers (4 ea.), and Lock nuts (4 ea.), mount bracket #51871 to the Driver's side of the radiator; (studs should be pointing towards the front of the vehicle) and bracket #51872 to the Passenger's side of the radiator. (the large cut out should be toward battery) ***see Detail 4***

Detail 4

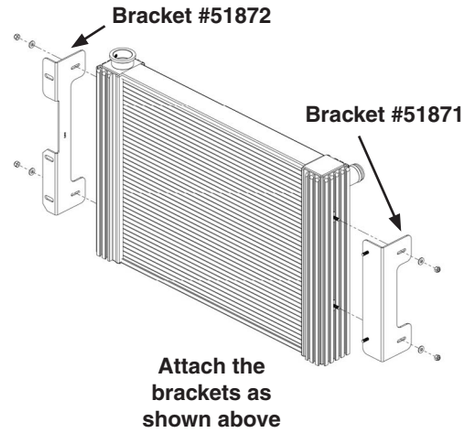

2. Once the brackets are attached, you will need to lower the radiator into the engine compartment. It is easiest if you feed the studs of Driver's side bracket into the stock mounting points on the front radiator support, then loosely secure with supplied 1" fender washers and locknuts but *do not* tighten locknuts yet.

3. Using the stock bolts (3 ea.) you removed earlier during step #11 of the "Removal" process, loosely secure the Passenger's side radiator bracket to the stock mounting points on the radiator support.

4. *Flex-a-Fit®* radiator tanks are made for maximum adjustability. Depending on space limitations within your engine compartment, you will need to adjust bracket positioning by sliding the T-nuts up / down or even select an alternate tank slot. Be sure all bracket mounting hardware has been sufficiently tightened after proper positioning has been achieved.

5. Resecure the pulley to the water pump, using the four (4) bolts that held the fan to the water pump, then reinstall fan belt. If you're replacing the radiator only, reattach the fan to water pump. **Note: Be sure to check the clearance of these bolts on the backside of the pulley to the water pump.** After tightened, there should be no less than ¼" of clearance to the water pump. If they are too close, they may cause severe damage to the water pump upon start-up. It may be necessary to replace these bolts with shorter ones.

6. Install the pipe-nipple for the overflow tube to the filler neck of the radiator. Route and trim the overflow hose as needed. Note: Be sure that there is enough clearance of the hose to any moving engine components.

7. Connect the upper and lower radiator hoses to the radiator. Make sure they are properly clamped to the inlet and outlet tubes. Note: BE SURE that all moving parts of the engine and electric fan are clear of each other before proceeding!!

8. Fill radiator/ cooling system with vehicle manufacture recommended coolant. Remember to fill reservoir to cold fill level if equiped.

Note: For automatic transmission equipped cars.

We chose not to install a transmission cooler within our radiator's side tank. This maximizes the cooling efficiency of both your engine and transmission. If you do have an automatic transmission, you will need to install an aftermarket transmission cooler. Flex-a-lite makes a full line of transmission coolers along with customized mounting options. The following FAL components are recommended to address your '67 – 69" Camaro's transmission cooling needs.

- FAL transmission cooler: pt. # 4116
- FAL Accessory Bracket set: pt. #32122
- FAL "GatorClips®" set: pt. #3909

For more mounting options, call Customer Assistance at: 1-877-767-0554 or FAX: (253) 922-0226.

#52187 with recomended transmission cooler and mounting hardware

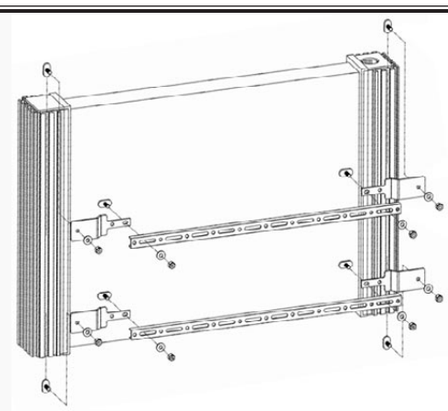

Exploded view of Accessory Bracket set: pt. # 32122

Wiring the Fan: Radiator and Fan Combo #52187 only

Wiring Diagram

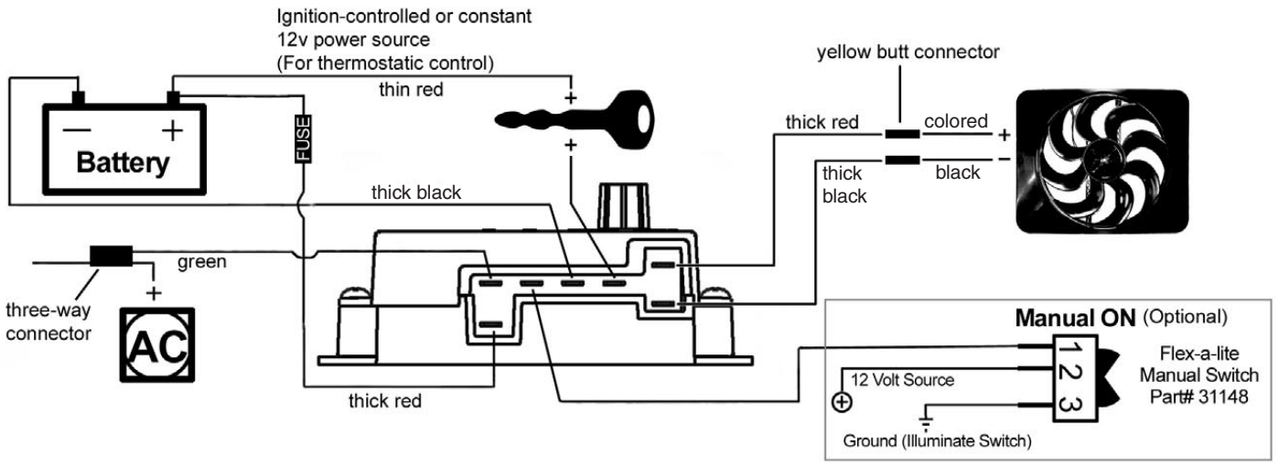

1. Connect the motor wires to the control module (Red wire to the “M+” terminal and black wire to the “M-” terminal).

2. Use the large diameter red (10 AWG) wire to run power directly from the battery positive (+) terminal to the “B” terminal on the control module. Connect the fuse holder in-line with this wire, as shown, but do not insert the fuse yet. Use the yellow female, ring, and butt connectors provided.

3. Use the large diameter black (10 AWG) wire to run from the negative (-) battery terminal to the “G” terminal on the control module. Use the yellow female connector and ring connector provided.

4. Use the small diameter red wire (14 AWG) to connect the “+” terminal on the control module to a positive power source. ***NOTE: Attaching this wire to an ignition-controlled source will shut off the fan when the engine is turned off.*** Attach this wire to an uninterrupted (always hot) power source to allow the fan to continue running after th e engine is shut off. Use the blue female connector and fuse taps (included) if necessary.

5. If the vehicle is equipped with air conditioning, a ***mandatory*** connection is needed between the “C” terminal on the control module and the positive wire that triggers the A/C compressor. Using a voltmeter, determine which wire coming from the compressor is the positive trigger wire. Use the included 3-way connector and small diameter green wire (14 AWG) to tap into this wire and send a signal to the fan control module. The fan will cycle on and off with the A/C clutch when the A/C is turned on.

6. (Optional) For manual switch operation, use Flex-a-lite p/n 31148. Connect the switch as shown on the wiring diagram (previous page). Connect the “M” terminal on the control module to the “1” terminal on the switch. Connect the “2” terminal on the switch to a positive 12v power source. Connect terminal “3” on the switch to a good ground (for switch illumination). ***NOTE: To prevent thermostatic activation (if only manual switch operation is desired), omit the lead to the “+” terminal of the control box. “B”, “G”, “M+” and “M-” must remain connected. If not using a Flex-a-lite manual switch, <u>do not connect</u> a ground wire to the switch!***

7. Use the zip ties provided to secure the wires and prevent them from interfering with fan blades, belts, and pulleys in the engine compartment. Insert the fuse provided.

Install temp. probe near inlet hose...

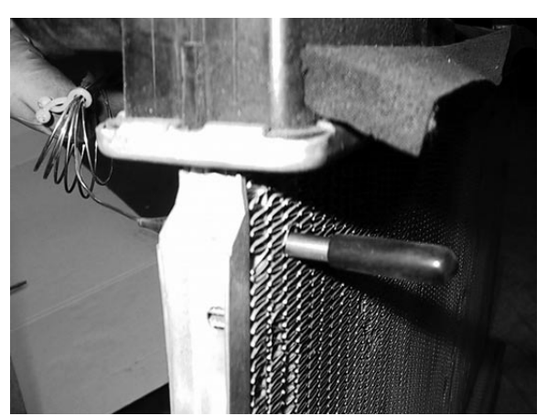

then replace the insulator cap.

8. Locate the inlet hose from the engine to the radiator. Remove the black insulator cap from the temperature probe then insert the temp. probe through the radiator fins near the inlet hose. Reinstall the black insulator cap.

9. Press the control knob (included in wiring kit) onto the control box shaft. Turn the knob clockwise until it stops.

10. Reconnect negative (-) battery cable to battery. Start the engine and allow it to idle. Using a hand held thermometer (positioned near the inlet hose) or the vehicle's temperature gauge, monitor the temperature. When the coolant temp is slightly above normal (or desired temp.), turn the knob counter-clockwise just until the fan turns on. From now on, the fan should activate at this temperature setting. Adjust as necessary to maintain desired temperature.

Troubleshooting the #180 electric fan

Problem	Possible Cause	How to find out	Solution
Fan does not turn on regardless of temperature	"+" terminal on control box not connected to proper source	Trace wire connected to the "+" terminal. Use a voltmeter or test light to check for voltage.	If there is no power to the "+" terminal, find an ignition-switched or constant 12v. power source and wire it to the "+" terminal on the control box.
Fan still does not turn on	Fuse to battery positive post blown. Wires to terminals "B" and "G" aren't properly hooked up.	Inspect the fuse in the holder. Check for power and ground through lines hooked to terminals "B" & "G".	Replace fuse. Hook up wires for terminals "B" & "G" to battery and ground respectively.
Fan still does not turn on	Motor wired improperly	Check to see that the blue motor wire runs to the "M+" terminal and the black motor wire runs to the "M-" terminal on the control box.	Connect wires to correct terminals. If motor does not spin after checking wiring, call tech support at 1-800-851-1510.
Fan does not come on until the temperature is very hot	Temp. probe not located in optimum position Temperature set to high	Check location of temp. probe. Locate temperature adjusting knob on top cover of control box	Temp. probe should be located nearest the upper radiator hose. Turn knob counter-clockwise to set the control box to a lower temperature.
Fan was working properly but suddenly shut down	Usage of a chassis ground and/or alternate source for power other than positive terminal on battery	Trace wire from terminals "B" and "G" to find source.	Move to posts on the battery.
When engine is started, fan comes on even though engine is cold	Constant (always "hot") 12v source hooked to "C" terminal A/C or defrost turned on	Trace the wire connected to the "C" terminal and make sure it is spliced into the positive trigger wire from the A/C compressor clutch. Check if defrost activates a/c or if the a/c is on.	Splice into the positive trigger wire to the A/C clutch and connect to the "C" terminal on control box. Shut off a/c or leave on as this is normal operation.

99993-Z