Toyota Tundra Electric Fan Kit; 00'–06'

#775 with Controls

#778 without Controls

REMOVAL OF EXISTING FAN AND SHROUD ASSEMBLY:

1. **Make sure the engine is cool.**
2. Disconnect negative (-) battery cable from battery.
3. Remove radiator cap.
4. From under the vehicle;
    a. Remove skid-plate mounted to frame and front cross member.
    b. Slowly loosen pet-cock to drain approximately 1 gallon of coolant. ***Note:*** Drain coolant to a level below upper end of the radiator hose.
    c. Remove lower section of the two piece shroud. It is held on by 2ea. metal clips and 2ea. molded plastic hooks.
    d. Remove bottom bolts 2ea. holding fan shroud to radiator side brackets. Save bolts for installation of new shroud.
5. From top side of engine compartment, disconnect radiator hose from top of radiator and secure it out of the way.
6. From the air ducting to intake manifold; remove bolt holding A/C return hose, then secure hose out of the way ***(see Detail 1)***. ***Note:*** bungee cords or long zip-ties work well.
7. Remove coolant overflow hose from radiator filler neck.
8. Remove top bolts 2ea. holding fan shroud to radiator side brackets. Save bolts for installation of new shroud.
9. Remove fan shroud by pulling strait up. ***Note:*** Be careful not to scrape against the radiator core.
10. Remove clutch fan assembly by removing 4ea. nuts securing flange to pulley. Re-secure pulley with washers of kit bag #13615 and previously removed nuts ***(see Detail 2)***.

Detail 1

A/C return line

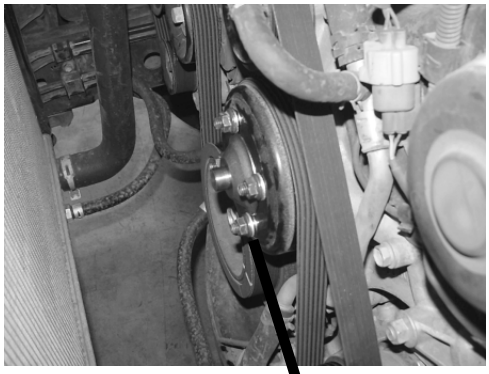

Detail 2

Resecured pully w/ washer kit

INSTALLATION OF NEW ELECTRIC FAN SHROUD:

You will want to "pre-wire" fan motor wires & Variable Speed Controller (VSC) to new fan shroud before mounting to vehicle.

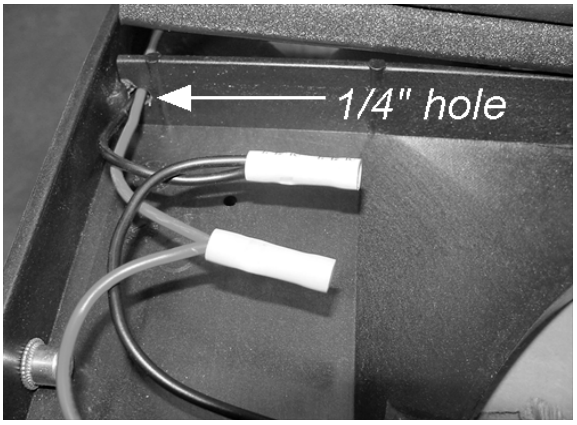

Detai A

11. Careful planning will save time. Look at the wires coming from the motors. The positives from each motor will be connected together, as will the negatives. Drill a ¼" hole through the center brace in the shroud to pass one pair of motor wires through. ***(see Detail A)***.
12. Place both red motor wires side by side and smoothly twist together. Completely insert pair of wires into one end of a yellow insulated butt connector. Crimp connector to secure. Repeat with black motor wires to another yellow insulated butt connector ***(see Detail A).*** **Red motor wire is (+) positive and the black is (-) negative.**

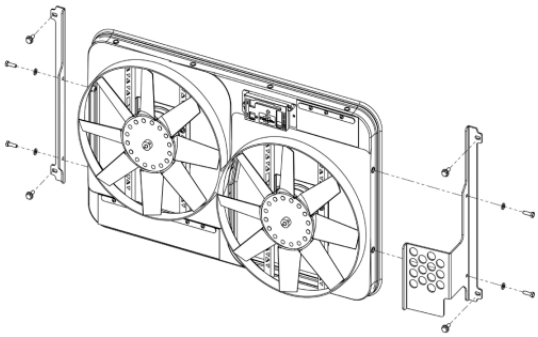

13. It is easiest to attach the VSC directly onto the front face of the fan shroud. Using the holes in the controller cover for a template, drill two 5/32" holes. Secure the VSC with the two screws provided.
14. Drill two ¼" holes in the shroud where the thick yellow & purple wires from the VSC will pass through to the back side of the shroud ***(see Detail B & C)***.
15. ***IMPORTANT:***
    Insert yellow wire into the open end of butt connector containing the two red motor wires and crimp connector securely. Insert purple wire into the open end of butt connector containing the two black motor wires and crimp connector securely. (see Detail C)
16. Mount bracket #77502 to driver's side and bracket #77501 to passenger's side of shroud. Use the hex bolts and washers provided.
17. Lower shroud assembly between engine and radiator and loosely mount at top using OEM bolts to original shroud mounting points. ***Note: Be very careful not to damage core.***
18. From under the vehicle;
    a. Attach bottom of shroud using OEM bolts to original shroud mounting points and tighten.
    b. Reinstall protective skid plate.

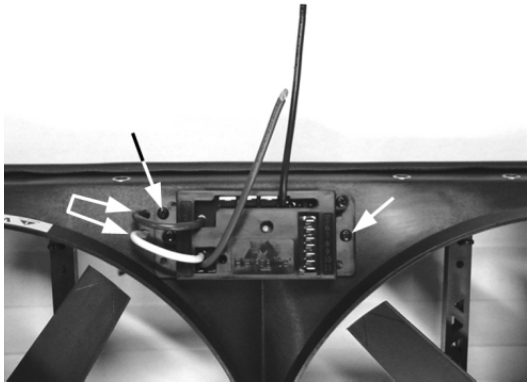

Detail B

Detail C

19. From top side of engine compartment, finish tightening shroud top mounting bolts.
20. Reattach radiator hose, refill radiator with coolant, and reattach radiator cap.
21. Reattach A/C return hose to original mounting point.
22. Find the thick red and black wire in the kit. Determine the length needed to connect the red and black power leads on the VSC to the battery terminals and trim appropriately. Crimp a large yellow ring connector to the end of the black wire and connect to the negative (-) battery terminal. Connect the other end to the black wire on the VSC with a large butt connector (yellow sleeve).
23. Locate the fuse holder but **DO NOT INSTALL THE FUSE UNTIL ALL WIRING IS COMPLETE.** Attach a large ring connector to one end and a yellow insulated butt connector to the other end of the fuse holder. Attach the ring connector to the positive (+) terminal of the battery and connect the other end to the thick red wire found in the kit. Determine the length of wire needed to reach from the fuse holder to the red wire on the VSC and trim appropriately. Use a yellow insulated butt connector to connect this wire to the red wire on the VSC. You may use the 2ea. small screws to mount the fuse holder if desired.

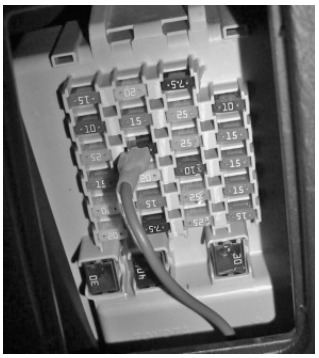

Detail D

24. Find a circuit in a fuse box that is "hot" only when the key is in the "ON" position (example: "Radio"). Attach the included fuse tap to fuse ***(see Detail D & E)***. Attach a blue female connector to one end of the thin red wire (included) and connect to fuse tap. Determine length of wire needed to reach VSC and trim to appropriate length. Attach a blue female connector to the end of the wire and connect to terminal #9 on VSC.

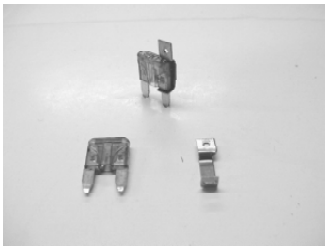

Detail E

25. On the top side of A/C compressor find a plug-in connector with 3 wires ***(see Detail F)***; locate the green wire w/ black stripe and attach supplied thin green wire by way of a piggyback connector. Determine the length of wire needed to reach from the piggyback connector to the VSC and trim appropriately. Crimp a pink female connector at the green wire's end and connect to terminal #8 of the VSC.
26. Locate temperature probe. Gently push the probe through fins in radiator as close to the upper radiator hose as possible with ¼"-½" of the probe protruding out of the front of the core. Install the rubber cap on the front side of the probe (if possible). This will give the VSC the most accurate engine temperature reading. Determine length of wire needed to reach VSC. **IMPORTANT:** Strip the insulation on the temperature probe wires back about ½" and fold wire on itself to effectively double the thickness of the wire before connecting pink female connectors. Attach these wires to terminals #10 & #11. Both wires need to be connected but it doesn't matter which wire goes to each terminal.

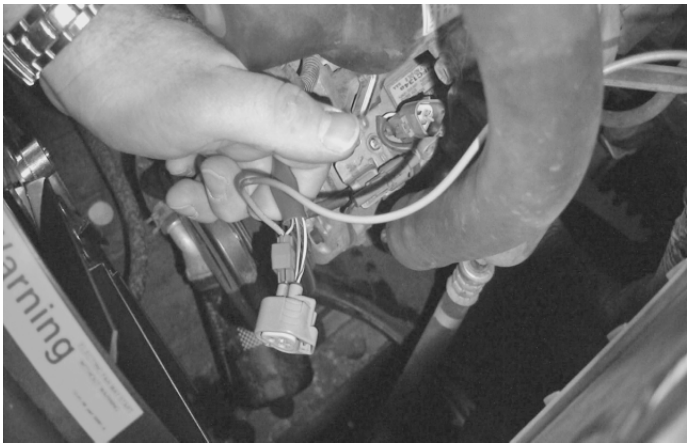

Detail F

27. If manual switches (Flex-a-lite #31148) have been purchased, attach them as follows. To override engine temperature to turn fans off, connect the switch to terminal #5 on VSC to send a ground signal. To override engine temperature to turn fans on, connect the switch to terminal #6 on the VSC to send a ground signal.

Initial VSC Set-up and Adjustment

1. Turn ignition on. After 5-6 seconds, LED #4 should light up, if not, check to make sure that you have 12 Volts at terminal #9 on VSC. The delay is to allow starter to start the vehicle without the fans drawing any power.
2. With your engine running, engage the A/C. Your fans should come on and cycle with the A/C clutch. LED's #1, 3 and 4 should be lit when fans are running. If they do not turn on, verify that the A/C clutch is engaged and make sure that you have the appropriate wire connected to the correct terminal on the VSC. Shut off A/C and let engine continue to idle until it reaches normal operating temperature. Verify that normal operating temperature has been reached by feeling upper radiator hose. Hot water should be flowing through the hose into radiator.
3. Adjusting the VSC to come on at normal operating temperature is done as follows: Locate adjustment screw through center of cover. Using a small strait bladed screwdriver turn the screw to the full clockwise position, let the vehicle reach desired operating temperature, then dial it back counter clockwise just until the fans engage.

   Note: Maximum rotation of adjusting screw is ¾ turn!

   DO NOT FORCE ADJUSTMENT!
4. Once desired temperature is set, let engine continue to idle in order to make sure the fans will cycle and maintain desired temperature. When fans are running, LED's #1 and 4 should be lit.

WIRING CONNECTIONS

#1 Battery Negative*
#2 Negative to Fan*
#3 Positive to Fan*
#4 Battery Positive*
#5 Negative Override Signal OFF
#6 Negative Override Signal ON
#7 A/C Compressor Negative Signal
#8 A/C Compressor Positive Signal
#9 Ignition Positive Signal*
#10 Temp Sensor Wire*
#11 Temp Sensor Wire*
L1 Fan Output Indicator
L2 Override Condition Indicator
L3 A/C Signal Indicator
L4 Ignition Signal Indicator

*** mandatory connections**

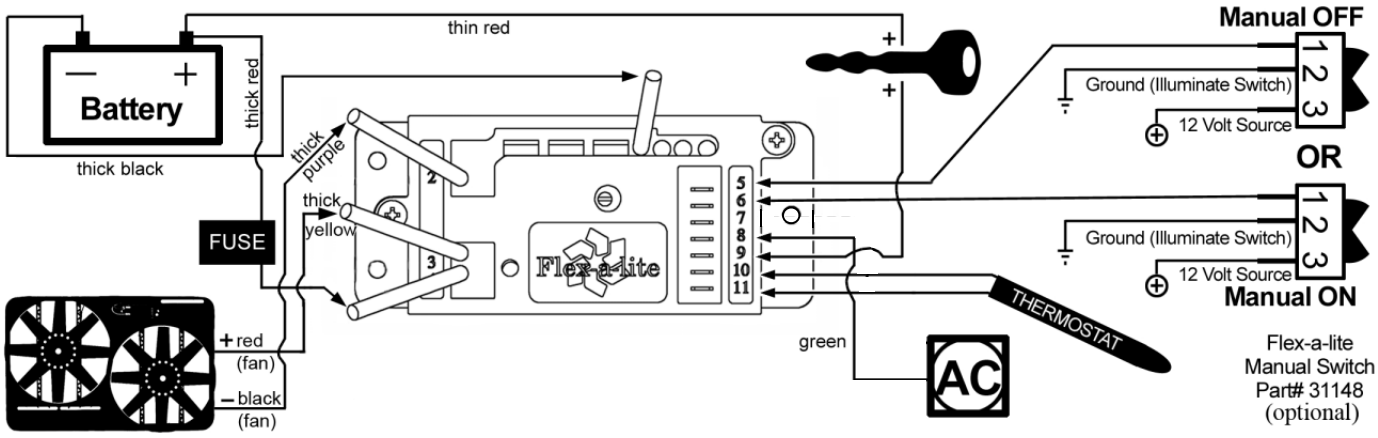

The Variable Speed Control has new features:

When you set the on Temperature, the fans will come on at 60%; this reduces the load on your charging system. If the temperature rises, the fan speed will increase. If your set temperature is 185 ° F, then between 185° and 195° the fan speed will increase from 60% to 100%. So after a 10° rise from the set point, the fans will be running at 100%.

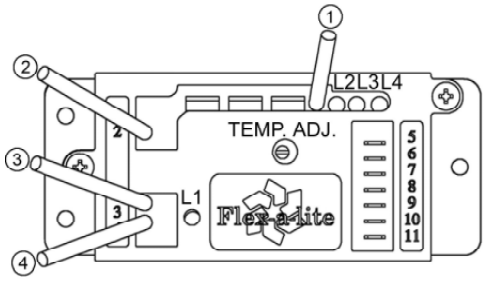

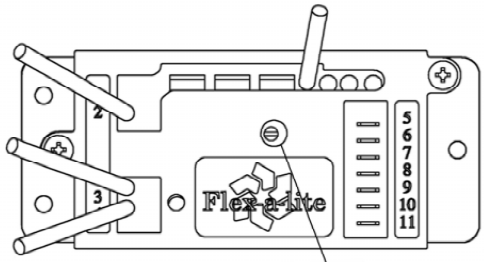

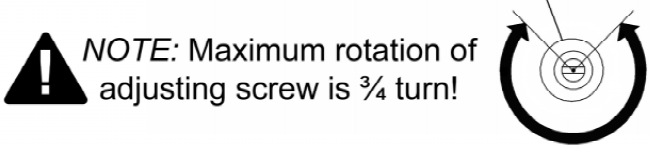

The Flex-a-lite Limited Warranty
Flex-a-lite Consolidated, 7213-45th St. Ct. E. Fife, WA 98424, Telephone No. 253-922-2700, warrants to the original purchasing user, that all Flex-a-lite products to be free of defects in material and workmanship for a period of 365 days **(1 year)** from date of purchase. Flex-a-lite products failing within 365 days **(1 year)** from date of purchase may be returned to the factory through the point of purchase, transportation charges prepaid. If, on inspection, cause of failure is determined to be defective material or workmanship and not by misuse, accidental or improper installation, Flex-a-lite will replace the product free of charge, transportation prepaid. **Flex-a-lite will not be liable for incidental, progressive or consequential damages.** Some states do not allow the exclusion or limitation of incidental or consequential damages, so the above limitation or exclusion may not apply to you. This warranty gives you specific legal rights and you may have other rights, which vary from state to state. The Flex-a-lite warranty is in compliance with the Magnuson-Moss Warranty Act of 1975.

Troubleshooting the Variable Speed Controller

Problem	Possible Cause	How to find out	Solution
Fans do not turn on regardless of temperature.	Ignition wire not hooked up to proper source.	Make sure you have a switched source hooked up to terminal number 9. Turn your key on and LED #4 should light after 5-6 seconds.	If there is no light, then provide a 12 volt source to terminal number 9.
LED #4 lights up, but my fans still do not turn on.	Thermistor probe may not be hooked up properly.	Remove the thermistor probe from the circuit board. Place a jumper across terminals 10 & 11.	Remove the connectors and make sure that the 22 gauge wire is doubled up before the new connector is installed to ensure proper contacts.
I have tested the thermistor probe but the fans still do not turn on.	Fuse to battery positive post blown. Wires to terminals 1 & 4 aren't properly hooked up.	Inspect the fuse in the holder. Check for ground and power through lines hooked to terminals 1 & 4.	Replace fuse. Hook up wires for terminals 1 & 4 to ground and power, respectively, to battery.
Fans still do not come on.	Motors wired improperly.	Remove the wires from terminals 2 & 4 and hook them directly to power and ground to check motors.	Check wiring to motors to ensure they are wired properly. If motors do not spin after checking wiring to them, call tech support at 1-800-851-1510.
Fans come on and it seems like they are only at 100% instead of the initial 60%.	They are actually on at 60% and haven't reached 100% yet.	Ground terminal 6.	This is the fan at 100%
Fans do not come on until the temperature is very hot.	Thermistor probe not located in optimum position. Temperature set to high.	Check location of thermistor probe. Locate temperature screw in center of VSC. **Note: maximum of rotation of screw is ¾ of a turn!**	Thermistor should be located nearest the upper radiator hose. Turn adjustment screw until fans come on. Turning further in this direction will keep engine at a lower temperature.
Fans were working properly but have suddenly shut down.	Usage of a chassis ground and/or alternate source for power other than positive terminal on battery.	Trace wire from terminals 1 & 4 to find source.	Move to posts on the battery.
I turn my engine on and the fans come on but the engine is cold.	A/C lead hooked to the wrong terminal. A/C turned on.	Trace the wire hooked to either number 7 or 8 terminal and check polarity of the wire. Check if defrost activates a/c or if the a/c is on.	Hook the wire to the proper terminal on the a/c compressor and the corresponding terminal at the VSC. Shut off a/c or leave on as this is normal operation.